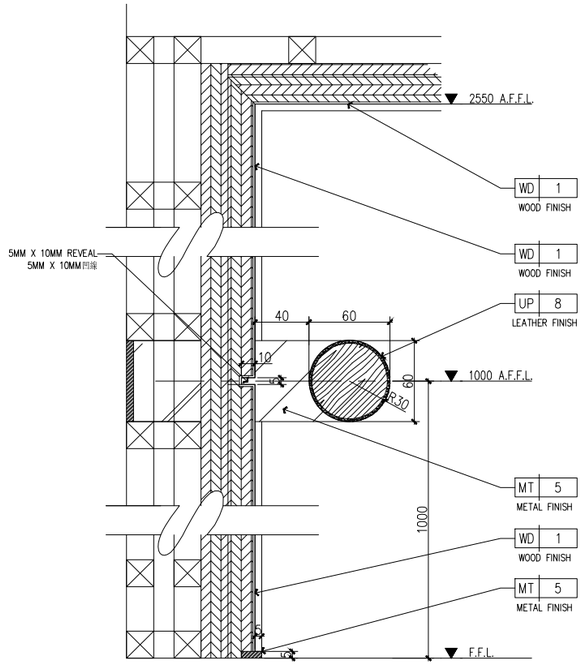

1 DETAIL
大樣圖 SCALE 1: 2

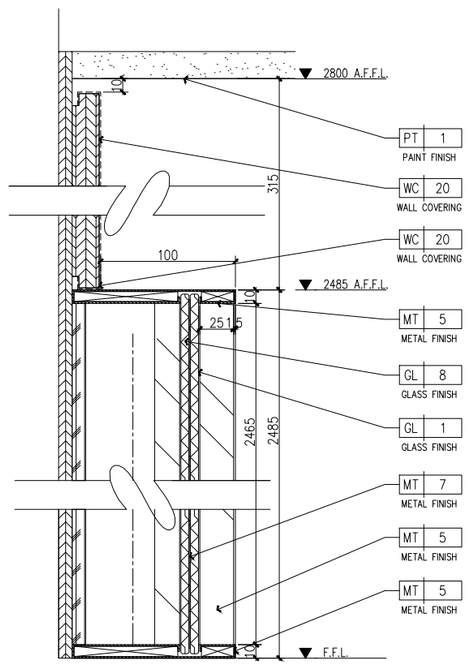

2 DETAIL
大樣圖 SCALE 1: 2

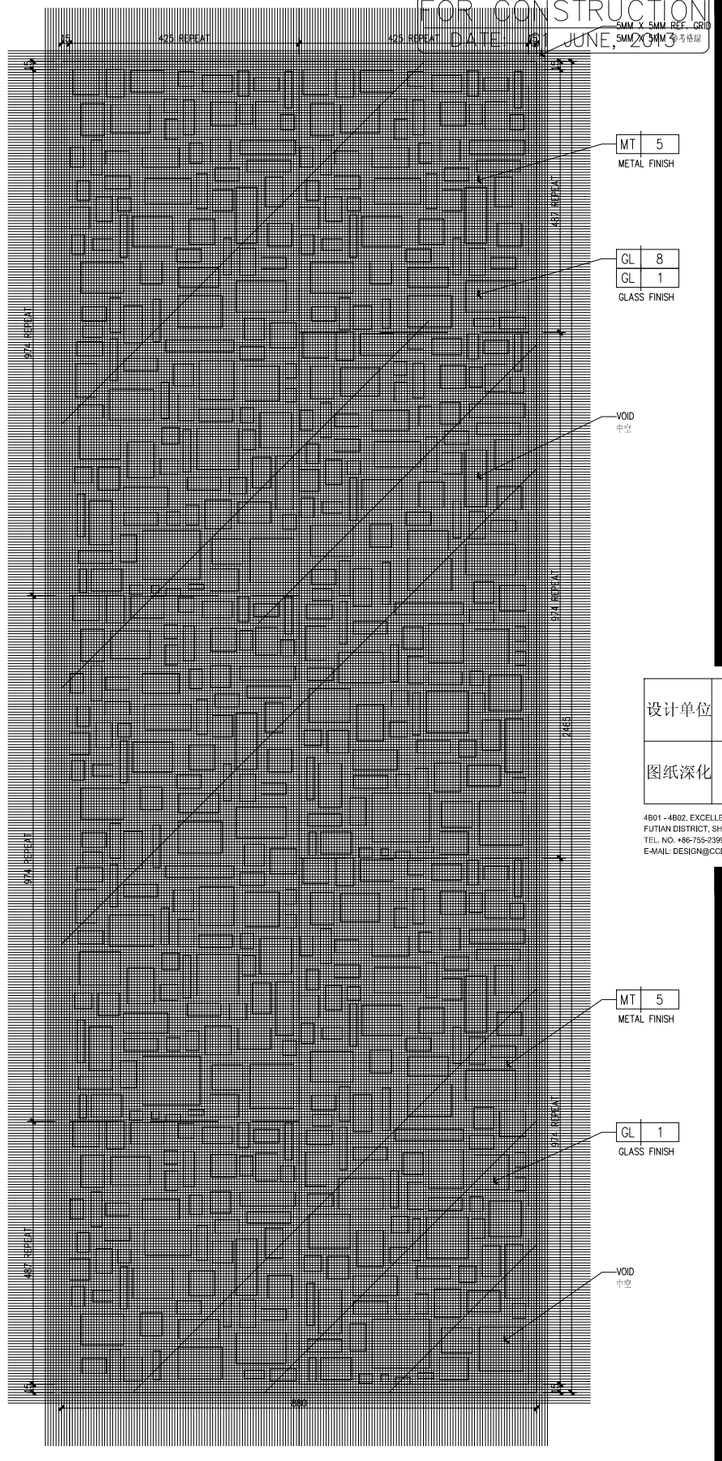

3 DETAIL
大樣圖 SCALE 1: 5

漳州融信皇冠假日酒店
RONGXIN CROWNE PLAZA HOTEL
ZHANGZHOU, CHINA

设计单位	CCD 香港郵中設計事務所 CHENGCHUNG DESIGN (HK) LTD.
图纸深化	YASHA 浙江亚厦装饰股份有限公司

4B01 - 4B02, EXCELLENCE TIMES PLAZA, 4068 YITIAN ROAD
FUTIAN DISTRICT, SHENZHEN, CHINA
TEL. NO. +86-755-2399-4999 FAX. NO. +86-755-8384-9557
E-MAIL: DESIGN@CCD.COM.HK

DRAWING TITLE

PUBLIC AREA - 公共部份

LIFT CAB DETAIL - 電梯箱大樣圖

ALL DESIGNS AND SPECIFICATIONS ARE THE PROPERTY OF CHENG CHUNG DESIGN (HK) LTD., AND CANNOT USED WITHOUT THEIR WRITTEN PERMISSION. THE SAME SHALL BE RETURNED UPON COMPLETION OF THE PROJECT. DO NOT SCALE DRAWINGS. ALL MEASUREMENTS MUST BE CHECKED ON SITE BY THE CONTRACTORS AND ANY DISCREPANCIES BROUGHT TO THE ATTENTION OF THE DESIGNER OR ARCHITECT. THIS DRAWING IS TO BE USED FOR THE PROJECT AND SEE IDENTIFIED AND NOT TO BE USED ON ANY OTHER PROJECT.

REVISION DATE

Scale 比例 AS SHOWN @ A1 Date 日期 10 APR, 2013
Designed BY 設計 Drawn BY 繪圖
Job NO. 項目編號 APPROVED BY 核准
HK-1024
Sheet NO. 圖號

DT-1.30-03